AutoGaurd:Automatic Intruder Alert System

A Report Submitted
as Requirements for the Community engagement project 1
Semester III, AY 2025-2026

Submitted by
Raza Sayed Roll no.53
Aarya Talegaonkar Roll No. 54
Sakshi Talkar Roll No. 55
Ashlesha Tambat Roll No. 56

Supervised by
Ms. Freda Carvalho

Department of Electronics & Telecommunication Engineering
The Bombay Salesian Society's
Don Bosco Institute of Technology,Mumbai, India

November, 2025

The Bombay Salesian Society's
Don Bosco Institute of Technology
(Affiliated to the University of Mumbai)
Premier Automobiles Road, Kurla, Mumbai - 400070

Certificate

This is to certify that the Community Engagement project 1 entitled **AutoGaurd:Automatic Intruder Alert System** is a work of

Raza Sayed 53
Aarya Talegaonkar 54
Sakshi Talkar 55
Ashlesha Tambat 56

submitted as fulfillment of the requirement for the Community Engagement Project 1 of **"Semester III"** in **"Second Year of Engineering AY 2025-2026"**.

(**Ms. Freda Carvalho**)	(**Ms.Madhvi Pednekar**)	
Assistant Professor, EXTC	HOD, EXTC	

The Bombay Salesian Society's
Don Bosco Institute of Technology
(Affiliated to the University of Mumbai)
Premier Automobiles Road, Kurla, Mumbai - 400070

Community Engagement Project 1 Report Approval

This Community engagement project 1 report entitled **'AutoGaurd:Automatic Intruder Alert System'** by **Raza Sayed,Aarya Talegaonkar, Sakshi Talkar and Ashlesha Tambat** is approved for the completion of Community Engagement Project I course **of Sem III of AY 2025-2026 in Deptartment of Electronics & Telecommunication Engineering.**

Examiners

1. _____

2. _____

Date : / /

Place : **Kurla, Mumbai**

Contents

Certificate

1 Introduction **1**
1.1 Project Motivation 1
1.1.1 Applications 2

2 Basic Concepts **3**
2.1 Project Objective & Outcomes 3

3 Project Implementation **4**
3.1 Block diagram 4
3.2 Circuit Diagram 5

4 Conclusion **6**
4.1 Market Analysis 6
4.2 Cost 7
4.3 Future Scope 7

Bibliography **8**

List of Tables

3.1 List of Components 5

4.2 Components and Cost 7

List of Figures

1.1 Prototype 2

Abstract

The AutoGuard: Automatic Intruder Alert System is a sustainable and affordable solution designed to enhance nighttime security in residential and community spaces. By automatically illuminating when motion is detected, it provides instant visibility for security guards and residents, helping prevent thefts and unauthorized entry while conserving energy. Its simplicity and low cost make it ideal for homes, garages, and public areas, improving safety without manual supervision. The project supports SDG 7 (Affordable and Clean Energy) by reducing unnecessary power use through motion-based lighting, SDG 9 (Industry, Innovation and Infrastructure) by encouraging low-cost automation for smart security infrastructure, and SDG 11 (Sustainable Cities and Communities) by fostering safer and more resilient neighborhoods

Chapter 1

Introduction

1.1 Project Motivation

In today's world, ensuring safety in residential societies, garages, and community areas has become increasingly vital, especially during nighttime when visibility is low and surveillance cameras alone may not be sufficient. Security guards often face challenges in detecting movement quickly through multiple camera feeds, which can delay their response to intrusions or suspicious activity. To address this problem, our project — AutoGuard: Automatic Intruder Alert System — was developed as a low-cost and energy-efficient solution that enhances night surveillance through automatic illumination. The system emits a bright red light upon detecting motion, deliberately chosen for its high visibility in darkness, effectively grabbing the attention of guards and helping them pinpoint the location of movement in real time. The motivation behind this project lies in creating a practical, affordable, and sustainable security aid that not only assists human monitoring but also reduces unnecessary energy usage. It aims to strengthen safety infrastructure while aligning with global sustainability goals such as SDG 7 (Affordable and Clean Energy) for efficient power use, SDG 9 (Industry, Innovation, and Infrastructure) for promoting smart automation, and SDG 11 (Sustainable Cities and Communities) for fostering safer living environments.[1][2]

1.1.1 Applications

The AutoGuard: Automatic Intruder Alert System can be implemented in various real-world scenarios to enhance safety, visibility, and energy efficiency. Its automatic illumination and alert mechanism make it suitable not only for individual use but also for community-level security systems. The project's versatility and low cost enable easy adoption in multiple areas where security and lighting are equally important.[3]

- **Residential Societies:** Alerts security guards of movement near gates, compounds, and parking areas for faster response. [**?**].
- **Garages and Driveways:** Provides instant lighting when a person or vehicle approaches, ensuring both security and convenience.
- **School Campuses and Commercial Buildings:** Detects unauthorized movement during non-working hours, preventing trespassing.
- **Community Halls and Public Areas:** Enhances visibility in shared spaces, ensuring safer gatherings and night activities.
- **Rural Pathways and Isolated Zones:** Acts as both a safety light and energy-saving illumination in areas with limited surveillance. [3]

Figure 1.1: Prototype

Chapter 2

Basic Concepts

2.1 Project Objective & Outcomes

The main objective of this project is to design and implement an intelligent security system that can automatically detect the presence of an intruder and alert the user in real-time through visual signals. The system, named AutoGuard, aims to provide an efficient, reliable, and cost-effective solution to enhance safety in homes and restricted areas. This project focuses on combining sensor technology, signal processing, and automation principles to create a self-operating security system that requires minimal human supervision.
[4]
After successful implementation, the AutoGuard system achieved several key outcomes. It provides accurate automatic intrusion detection using IR sensors to sense unauthorized movement and instantly triggers a visual alert to notify the user. The system ensures 24/7 monitoring with minimal human supervision and operates efficiently with low power consumption. Its simple and cost-effective design makes it a reliable solution for enhancing security in homes, offices, and restricted areas.
[4]

Chapter 3

Project Implementation

3.1 Block diagram

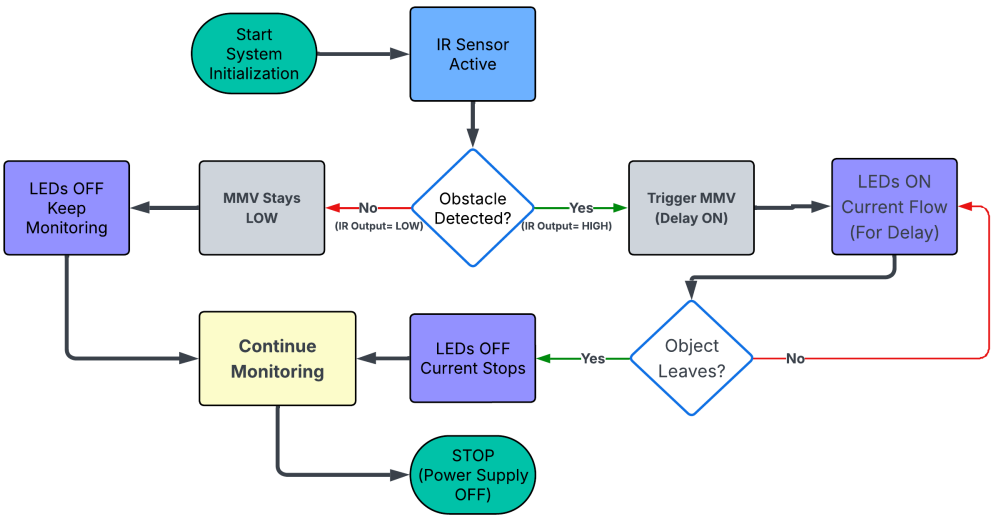

This block diagram represents an automatic LED lighting system controlled by an IR sensor and a monostable multivibrator (MMV) delay circuit. The system starts with initialization and activates the IR sensor to continuously monitor for an obstacle. When no object is detected, the IR output remains LOW, so the MMV stays LOW and the LEDs remain OFF while the system keeps monitoring. When an obstacle is detected, the IR output becomes HIGH and triggers the MMV, which turns the LEDs ON for a set delay period. During this

time, if the object remains present, the LEDs continue to stay ON. Once the object leaves, the MMV stops driving the LEDs, the current to the LEDs is cut off, and they turn OFF. The system then resumes monitoring for a new object. Eventually, when the power supply is turned OFF, the system stops functioning.

3.2 Circuit Diagram

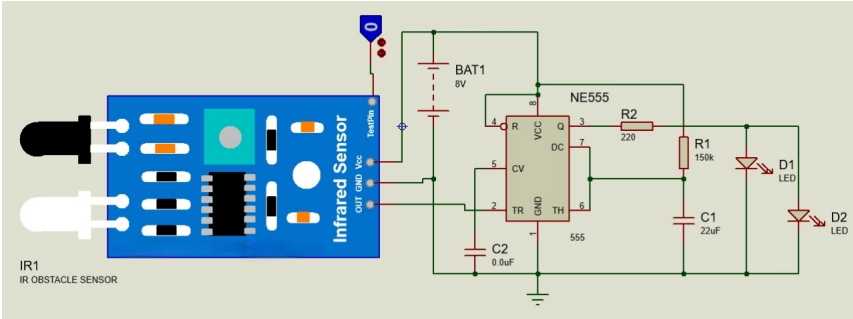

Table 3.1: List of Components

IR Sensor Module
NE555 – Timer IC
9V Battery
Small Breadboard
Capacitor C1 and C2 of 22uf and 0.01uf
Resistors R1 and R2 of 150k ohms and 220 ohms
LED D1 and D2
[5]

Chapter 4

Conclusion

4.1 Market Analysis

The market for compact intrusion-alert and motion-activated systems in India is expanding quickly as people seek simple, affordable, and low-maintenance security solutions. Several established security companies already offer motion-sensor–based products, showing strong demand for this category, but many of these solutions remain expensive or require advanced setups. This creates a clear opportunity for a low-cost, standalone device like ours, which fits the needs of households, small shops, and institutions looking for reliable security without wiring, Wi-Fi, or high installation costs.[6]

- There are well-known brands like Godrej and Honeywell that offer home and enterprise-grade alarm systems, often including motion sensors, door/window sensors, and full alarm kits
- Specialist firms such as Zicom, Securico and Sensinova focus more specifically on PIR/motion sensors, security alarms, and small intrusion-detection devices — catering to residential and small-business customers.
- The presence of these companies shows a ready demand for simple, battery-powered, easy-to-install security solutions, especially in urban and semi-urban India where many users prefer DIY-type systems rather than full CCTV/ wired-alarm installations
- Given the competition, there is space for a product like ours to find a niche — especially if we emphasise low cost, battery oper-

ation (9 V), compactness, ease of installation, and possibly additional features

- For market acceptance, targeting apartments, small shops, garages, and remote utility rooms — where a full professional security setup may be overkill — could be particularly effective.[7]

4.2 Cost

Table 4.2: Components and Cost

Components	Approx. Cost(Rs)
IR Sensor Module	64
NE555 – Timer IC	10
9V Battery	40
Small Breadboard	50
Capacitor C1 and C2 of 22uf and 0.01uf	5+5=10
Resistors R1 and R2 of 150k ohms and 220 ohms	2+2= 4
LED D1 and D2	5
Total	183

Total Estimated Cost: 180 Rs – 200 Rs

4.3 Future Scope

- The system can be upgraded to send instant alerts via mobile notifications / alarms to security guards whenever unauthorized movement is detected.
- Incorporating AI can help recognize suspicious behavior, identify faces, or distinguish between humans and animals, reducing false alarms.
- Integrating solar panels and backup power units can ensure uninterrupted operation, especially in remote or outdoor security zones.
- IoT connectivity can enable remote access, live status updates, and data analysis for better control and predictive security management.[8]

Bibliography

[1] A. Rao and R. Mehta, "Enhancing urban safety through intelligent surveillance and motion-based alert systems," *Journal of Smart Security and Urban Management*, vol. 12, no. 3, pp. 145–158, 2020.

[2] K. Singh and M. Das, "Sustainable automation systems: Energy-efficient motion sensors and their role in achieving sdgs," *International Journal of Sustainable Engineering and Technology*, vol. 9, no. 1, pp. 32–47, 2021.

[3] S. Patel and M. Iyer, "Applications of motion-activated lighting and intruder alert systems in residential, commercial, and public environments," *Journal of Intelligent Safety and Security Technologies*, vol. 15, no. 2, pp. 89–102, 2021.

[4] R. Kumar and N. Bhattacharya, "Intelligent intrusion detection systems using infrared sensors and automated alert mechanisms," *International Journal of Embedded Systems and Smart Automation*, vol. 18, no. 4, pp. 221–230, 2020.

[5] J. Fraden, *Handbook of Modern Sensors: Physics, Designs, and Applications*, 5th ed. Springer, 2015.

[6] K. India, "Indian security industry: Emerging trends and opportunities," *KPMG Market Insights*, 2019. [Online]. Available: https://home.kpmg/

[7] M. of Electronics and G. o. I. Information Technology, "Growth of the indian electronics and iot device market," *MeitY Annual Report*, 2021. [Online]. Available: https://www.meity.gov.in/

[8] A. Sharma and K. Verma, "Next-generation smart security systems: Iot connectivity, ai-based detection, and sustainable power

integration," *Journal of Advanced IoT and Intelligent Surveillance*, vol. 11, no. 2, pp. 75– ninety, 2022.